SPECIFICATION APPLIED

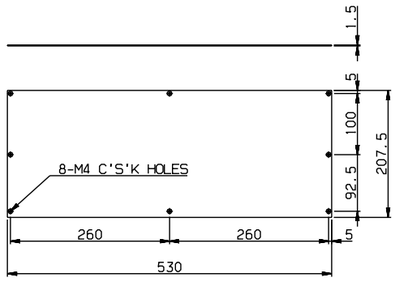

DETAIL #31

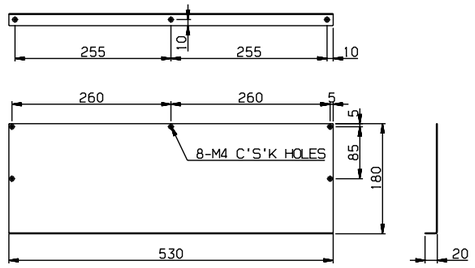

DETAIL #32

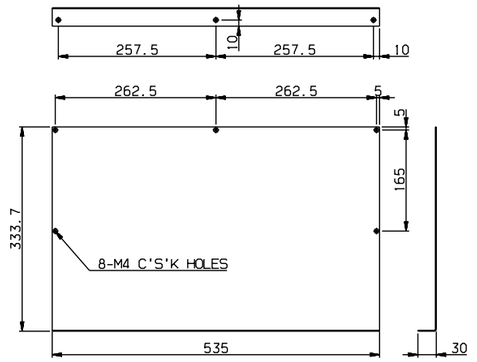

DETAIL #33

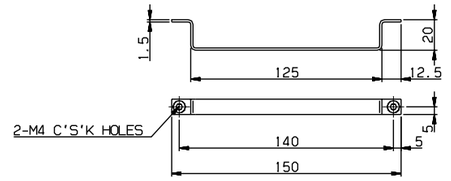

DETAIL #48

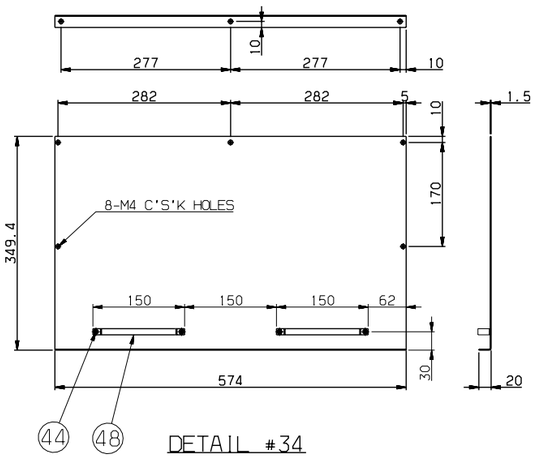

DETAIL #34

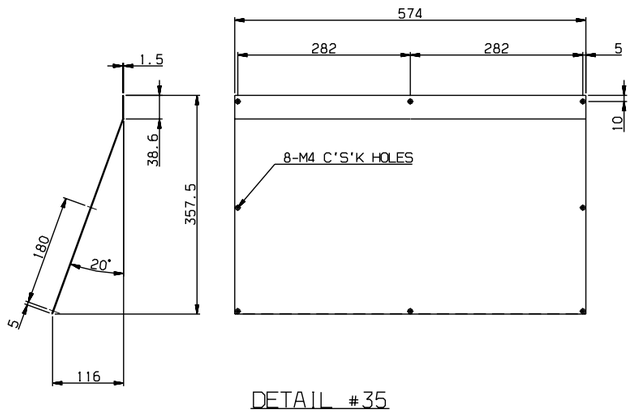

DETAIL #35

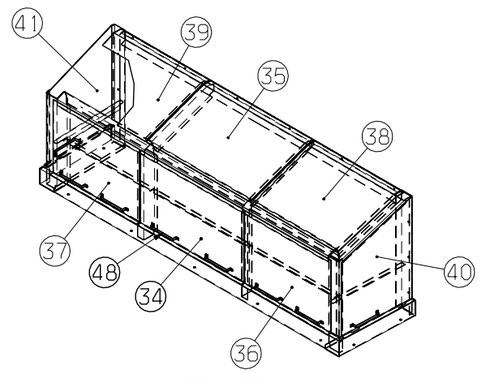

ISO VIEW
(OUTSIDE PANEL)

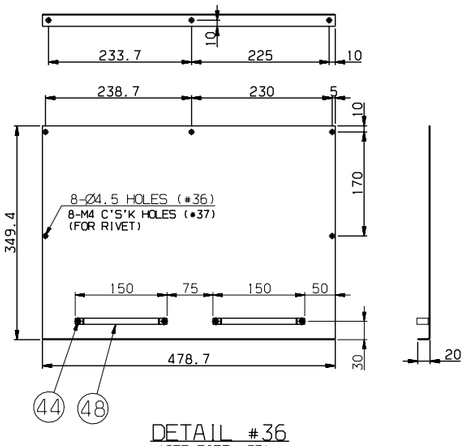

DETAIL #36
(OPP.PART #37)

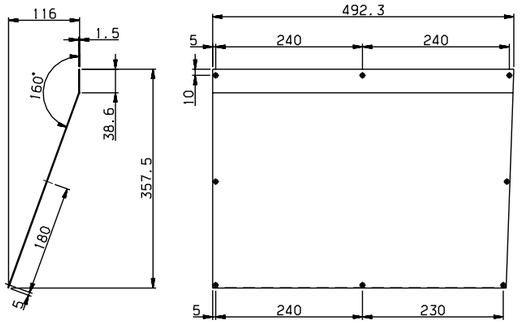

DETAIL #38
(OPP.PART #39)

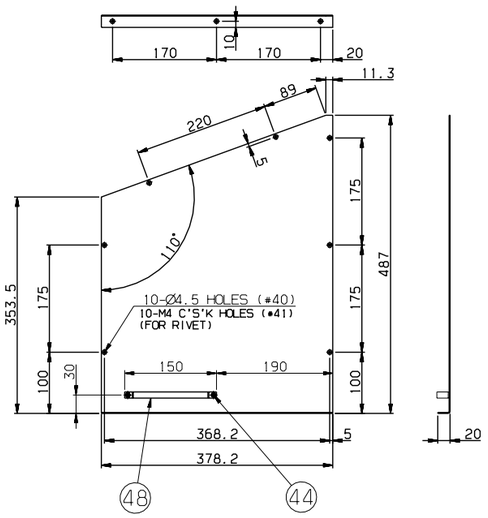

DETAIL #40
(OPP.PART #41)

NOTE

1. PART 22~26,28~33 SHOULD BE MOUNTED WITH RIVET AND SEALANT(#49).
2. PART 21,27 SHOULD BE SEALED WITH PART 49 AFTER MOUNTING.
3. PART 1~20 SHOULD BE WELDED.
4. PART 34~41 SHOULD BE SUPPLIED SEPARATELY.
5. PART 45 SHOULD BE APPLIED WITH PART 50.

일반공차 GENERAL TOLERANCE			
등급 GRADE	A	B	C
가공 치수 MACHINING (±)			
~ 6	0.05	0.1	0.2
~ 30	0.1	0.2	0.5
~ 120	0.15	0.3	0.8
~ 315	0.2	0.5	1.2
~ 1M	0.3	0.8	2.0
~ 2M	0.5	1.2	3.0
~ 4M	0.8	2.0	4.0
~ 8M	-	3.0	5.0
~ 12M	-	4.0	6.0
~ 15M	-	5.0	7.0
~ 20M	-	6.0	8.0
용접 구조물 WELDING (±)			
등급 GRADE	A	B	C
~ 100	1	1.5	
~ 200	1.5	2	
~ 400	2	3	
~ 800	3	4	
~ 1600	4	5	
~ 3150	-	7	
주물, 주조품 CASTING (±)			
~ 4	0.5	1	
~ 30	2	3	
~ 10	1	1.5	
등급 GRADE	A	B	
~ 100	4	8	
~ 200	5	8	14
~ 400	6	10	16
~ 800	8	14	24
~ 1600	12	20	32
~ 3150	16	28	40

ITEM NO.	PART NO.	DESCRIPTION	MATERIAL	Q'TY	V.T	REMARKS
50	CP920138-400	ADHESIVE,LOCTITE 243	ASSY	1		LOCTITE 243
49	CP910003-445	SEALANT	POLYURETHANE	1		SIKAFLEX_221,GRAY
48	RFP51311EJ0-048	WIRE SUPPORT	SUS304	8		T1.5
47	RS60801-004S	WASHER,SPRING	SUS304	16		M4
46	RS60807-007S	WASHER,PLAIN	SUS304	16		M4
45	RS60114-023S	BOLT,HEX.,HEAD	SUS304	16		M4X12
44	RS60919-063S	RIVET,BLIND,CSK HEAD	SUS304	121		M4X8
43	RFP51311EJ0-043	PACKING	CR	1		T2X15 M539000-004(SC70-F2(CR))
42	RFP51311EJ0-042	PACKING	CR	1		T2X15 M539000-004(SC70-F2(CR))
41	RFP51311EJ0-041	PANEL,OUTSIDE	SUS304	1		T1.5 (OPPOSITE FROM #40)
40	RFP51311EJ0-040	PANEL,OUTSIDE	SUS304	1		T1.5
39	RFP51311EJ0-039	PANEL,OUTSIDE	SUS304	1		T1.5 (OPPOSITE FROM #38)
38	RFP51311EJ0-038	PANEL,OUTSIDE	SUS304	1		T1.5
37	RFP51311EJ0-037	PANEL,OUTSIDE	SUS304	1		T1.5 (OPPOSITE FROM #36)
36	RFP51311EJ0-036	PANEL,OUTSIDE	SUS304	1		T1.5
35	RFP51311EJ0-035	PANEL,OUTSIDE	SUS304	1		T1.5
34	RFP51311EJ0-034	PANEL,OUTSIDE	SUS304	1		T1.5
33	RFP51311EJ0-033	PANEL,INSIDE	SUS304	1		T1.5
32	RFP51311EJ0-032	PANEL,INSIDE	SUS304	1		T1.5
31	RFP51311EJ0-031	PANEL,INSIDE	SUS304	1		T1.5
30	RFP51311EJ0-030	PANEL,INSIDE	SUS304	1		T1.5 (OPPOSITE FROM #29)
29	RFP51311EJ0-029	PANEL,INSIDE	SUS304	1		T1.5
28	RFP51311EJ0-028	PANEL,INSIDE	SUS304	1		T1.5
27	RFP51311EJ0-027	PANEL,INSIDE	SUS304	1		T1.5
26	RFP51311EJ0-026	PANEL,INSIDE	SUS304	1		T1.5 (OPPOSITE FROM #25)
25	RFP51311EJ0-025	PANEL,INSIDE	SUS304	1		T1.5
24	RFP51311EJ0-024	PANEL,INSIDE	SUS304	1		T1.5 (OPPOSITE FROM #23)
23	RFP51311EJ0-023	PANEL,INSIDE	SUS304	1		T1.5
22	RFP51311EJ0-022	PANEL,INSIDE	SUS304	1		T1.5
21	RFP51311EJ0-021	PANEL,INSIDE	SUS304	1		T1.5
20	RFP51311EJ0-020	FRAME	SUS304	1		T2.5 AS DRAWN
19	RFP51311EJ0-019	FRAME	SUS304	1		T2.5 (SECTION #15)
18	RFP51311EJ0-018	FRAME	SUS304	1		T2.5 (SECTION #15)
17	RFP51311EJ0-017	FRAME	SUS304	1		T2.5 (SECTION #15)
16	RFP51311EJ0-016	FRAME	SUS304	1		T2.5 (OPPOSITE FROM #15)
15	RFP51311EJ0-015	FRAME	SUS304	1		T2.5 AS DRAWN
14	RFP51311EJ0-014	FRAME	SUS304	1		T2.5 (OPPOSITE FROM #13)
13	RFP51311EJ0-013	FRAME	SUS304	1		T2.5 AS DRAWN
12	RFP51311EJ0-012	FRAME	SUS304	1		T2.5 (OPPOSITE FROM #12)
11	RFP51311EJ0-011	FRAME	SUS304	1		T2.5 AS DRAWN
10	RFP51311EJ0-010	FRAME	SUS304	1		T2.5 (OPPOSITE FROM #10)
9	RFP51311EJ0-009	FRAME	SUS304	1		T2.5 AS DRAWN
8	RFP51311EJ0-008	FRAME	SUS304	1		T2.5 (OPPOSITE FROM #7)
7	RFP51311EJ0-007	FRAME	SUS304	1		T2.5 AS DRAWN
6	RFP51311EJ0-006	FRAME	SUS304	1		T2.5 (OPPOSITE FROM #5)
5	RFP51311EJ0-005	FRAME	SUS304	1		T2.5 AS DRAWN
4	RFP51311EJ0-004	FRAME	SUS304	1		T2.5 AS DRAWN
3	RFP51311EJ0-003	FRAME	SUS304	1		T2.5 (OPPOSITE FROM #2)
2	RFP51311EJ0-002	FRAME	SUS304	1		T2.5 AS DRAWN
1	RFP51311EJ0-001	FRAME	SUS304	1		T2.5 AS DRAWN

승인 APP	JeongYul Lee 2014.10.27	재질 MAT'L	ASSY
검도 CHK	KeongBong Park 2014.10.27	총중량 G.W	
설계 DGN	HeonUk Lee 2014.10.27	척도 SCALE	1/5
제도 DRG	HeeSook Jeong 2014.10.27	크기 SIZE	A1

TITLE: FRAME,ENGINE FILTER(3/3)

DRG. NO: RFP51311EJ0 | Ver. 00 | Rev. --

일반 공차	MC	WD	CT
	B	B	B

SHEET 3 of 3

RSD1402 | RFP- | 넌-PRJT | 참리본출 | CATIA

기호 MARK	일자 DATE	변경 내역 DETAIL OF REVISION(E.C ZONE)	설변번호 E.C NO.	설계 DGN	검도 CHK	승인 APP
△						

참조 REF. NO.

본 도면은 당사 재산이므로 허락없이 무단복사/배포 금지함. PROPERTY OF ISSUING ENTITY. CANNOT BE DISTRIBUTED OR REPRODUCED WITHOUT AUTHORIZATION.

현대로템주식회사